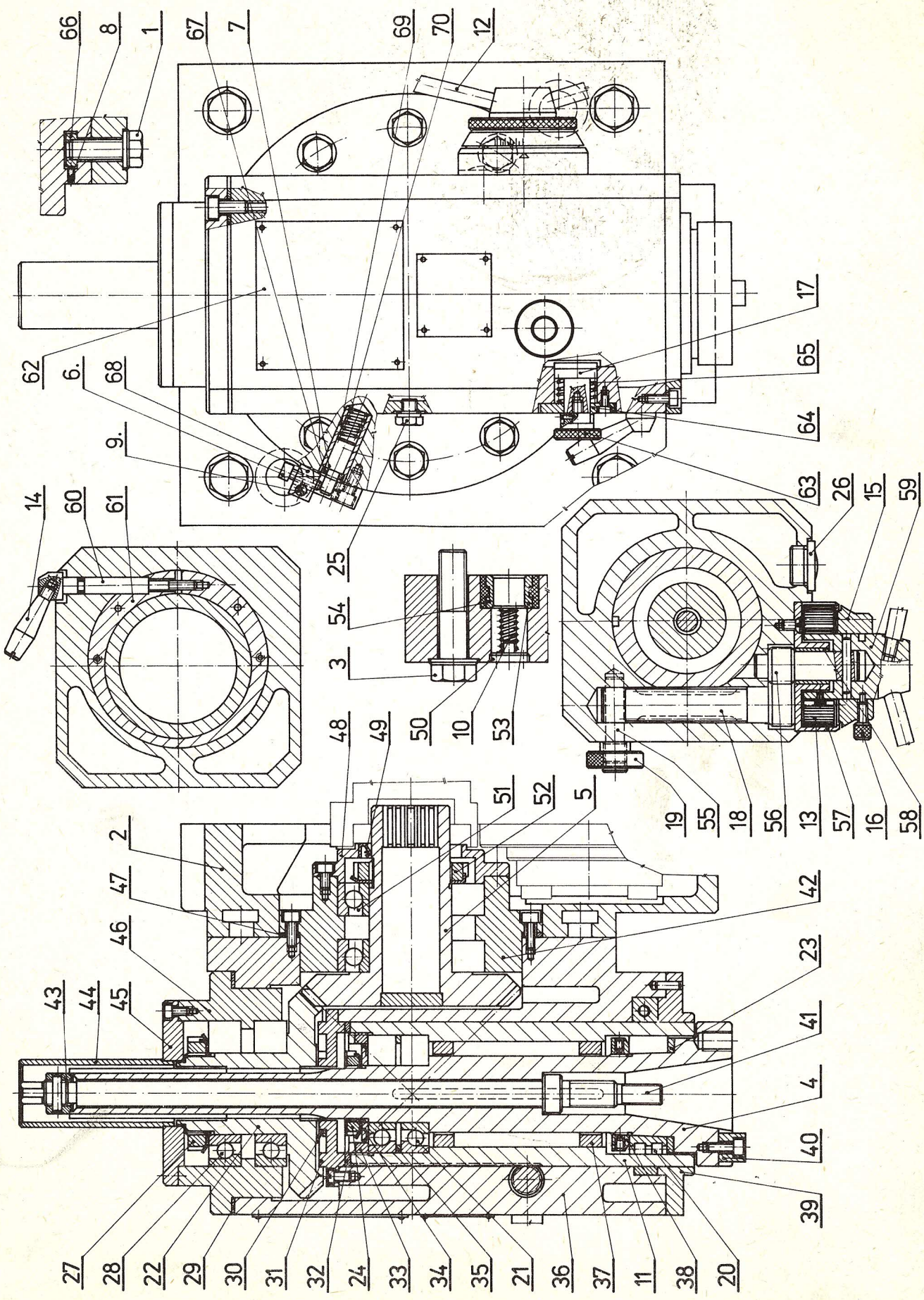FNGJ 32	5. 2. 2.	42